Notice: Use of these CAD drawings and accompanying manuals for the purpose of constructing or having constructed an aquaponics system and/or greenhouse substantially similar to the ones shown in the manual and CAD drawings constitutes acceptance of the following conditions and terms of use of this material:

1. **You have the right to personally construct or have constructed one or more aquaponics systems and/or greenhouses to these designs for your own personal or business use.**
2. **If you construct aquaponics systems and/or greenhouses for others, allow others to use these plans; "lend" these plans, or sell these plans to have aquaponics systems constructed by or for others you hereby agree to remit to Friendly Aquaponics, Inc., Honokaa, Hawaii 96727, the sum of $500 US for each such aquaponics system and/or greenhouse constructed using these plans.**

NOTE: THIS MATERIAL COPYRIGHT BY FRIENDLY AQUAPONICS, INC, SUSANNE FRIEND, AND TIM MANN 2008-2012. COPYING OR USING PORTIONS OR EXCERPTS OF THIS MATERIAL WITHOUT EXPRESS WRITTEN PERMISSION FROM THE AUTHORS IS PROHIBITED BY LAW.

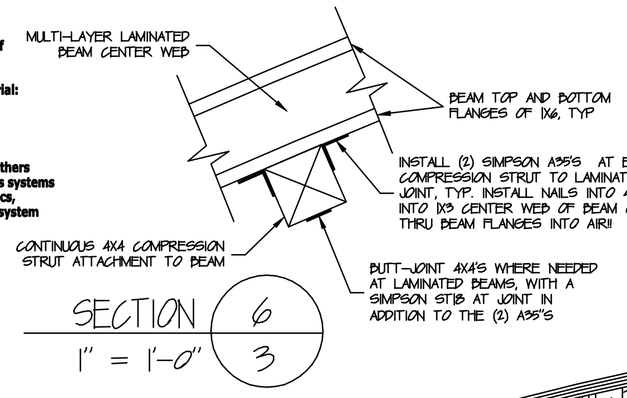

SECTION 6/3
1" = 1'-0"

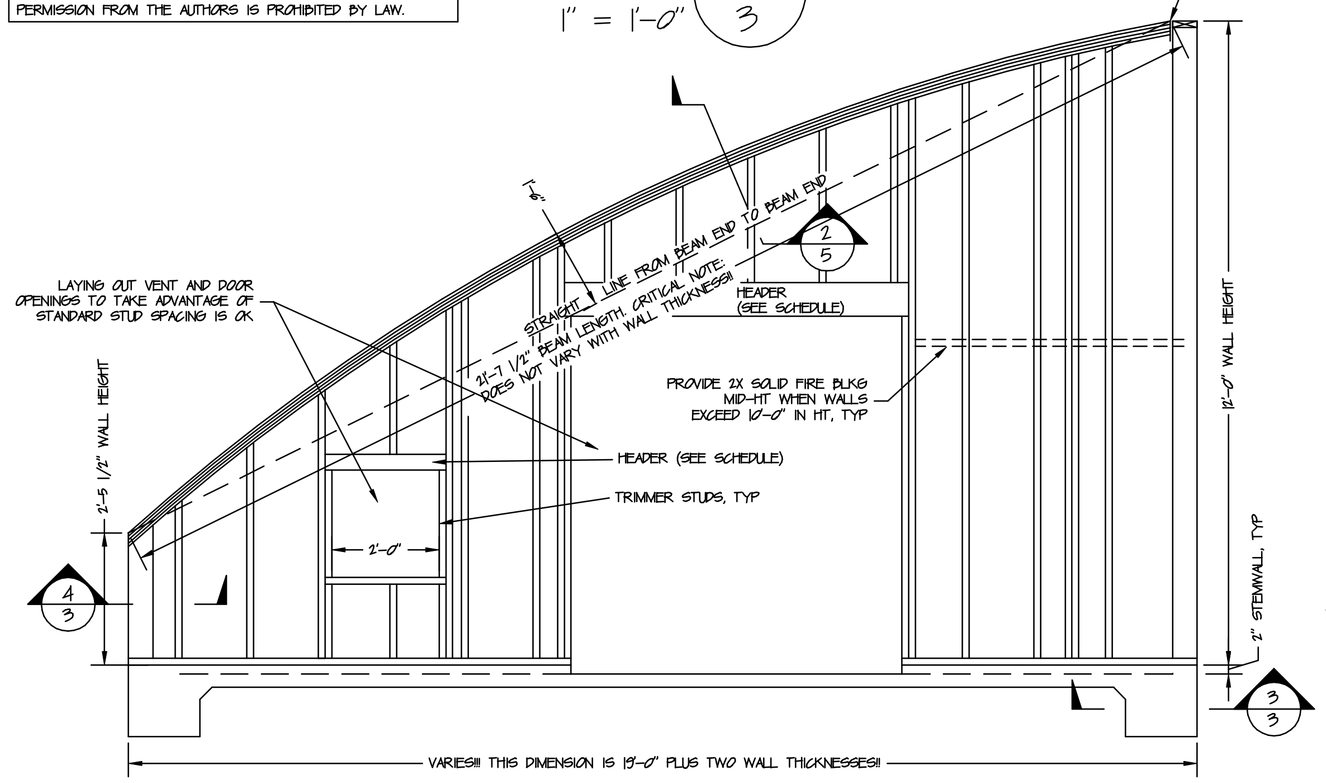

SECTION/ FRAMING ELEVATION 2/3
1/2" = 1'-0"

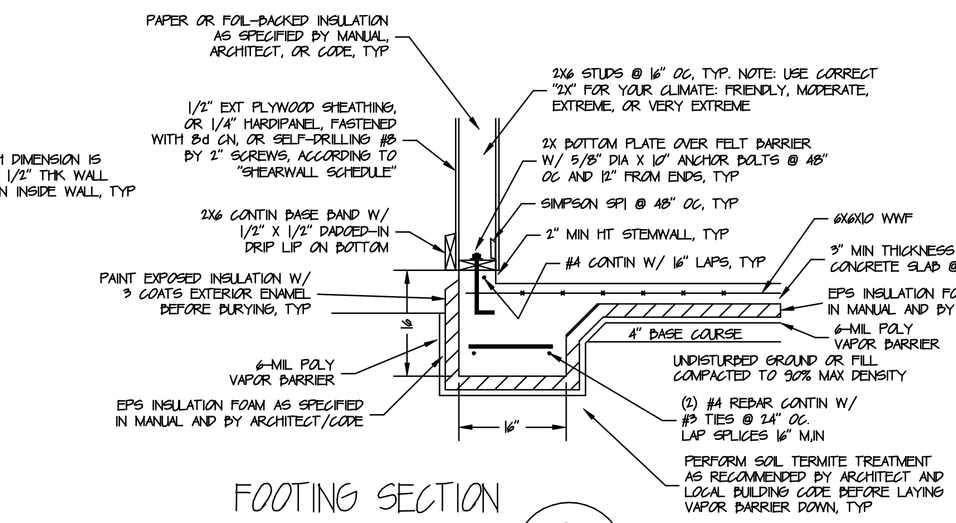

FOOTING SECTION WITH SLAB 3/3
3/4" = 1'-0"

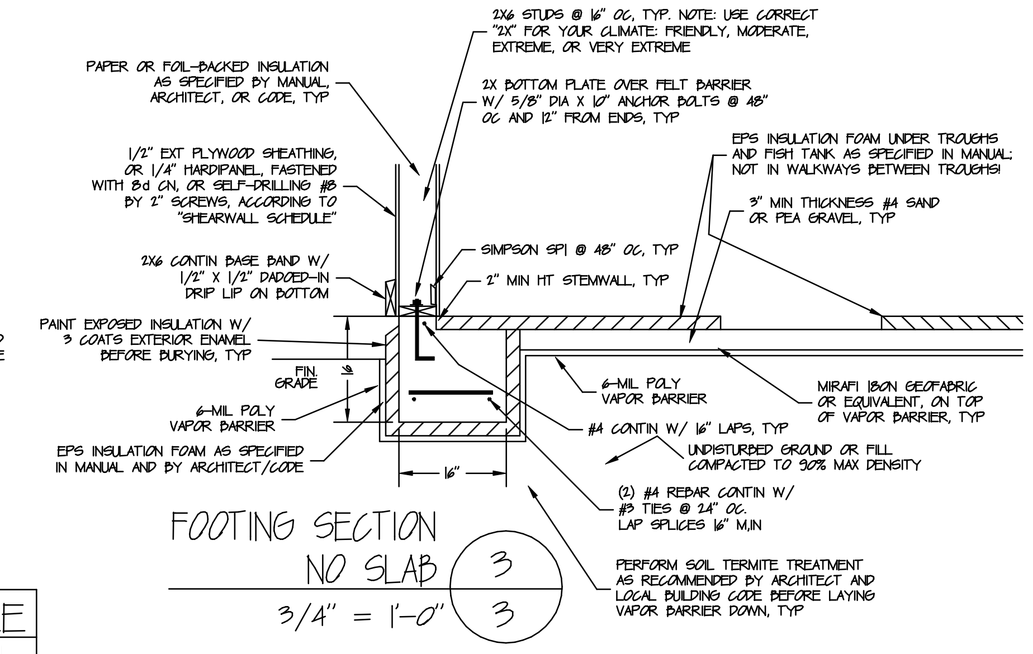

FOOTING SECTION NO SLAB 3/3
3/4" = 1'-0"

HEADER SCHEDULE

SIZE (#1 OR BETTER DOUG FIR)	CAN SUB. (GLULAM SIZING)	MAXIMUM SPANS GREENHOUSE USE ONLY
4X4	N/A	4'-0"
4X6	N/A	6'-0"
4X8	N/A	8'-0"
4X10	N/A	10'-0"
4X12	3-1/8 X 10-1/2	12'-0"
4X14	3-1/8 X 12	14'-0"
6X12	5-1/8 X 10-1/2	18'-0"
6X14	5-1/8 X 12	19'-6"

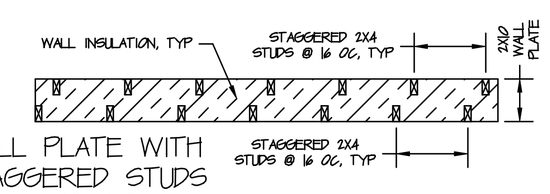

WALL PLATE WITH STAGGERED STUDS
1/2" = 1'-0"
PLAN VIEW

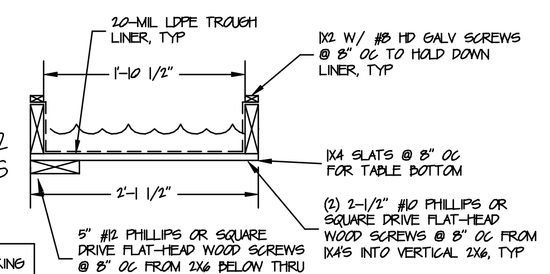

TYPE 2 LINER AND SLATS

NOTE: THERE ARE TWO EASY METHODS OF MAKING THE SPROUTING TABLES. ONE USES EPOXY GLUE AND FIBERGLASS TO MAKE A PERMANENT WATERPROOF TABLE, WHILE NUMBER TWO USES STANDARD 20-MIL LDPE TROUGH LINER TO WATERPROOF THE TABLE. PICK THE ONE THAT IS EASIEST FOR YOU TO BUILD.

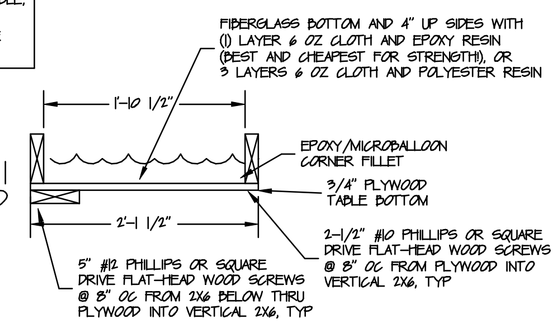

TYPE 1 FIBERGLASS/EPOXY/PLYWOOD

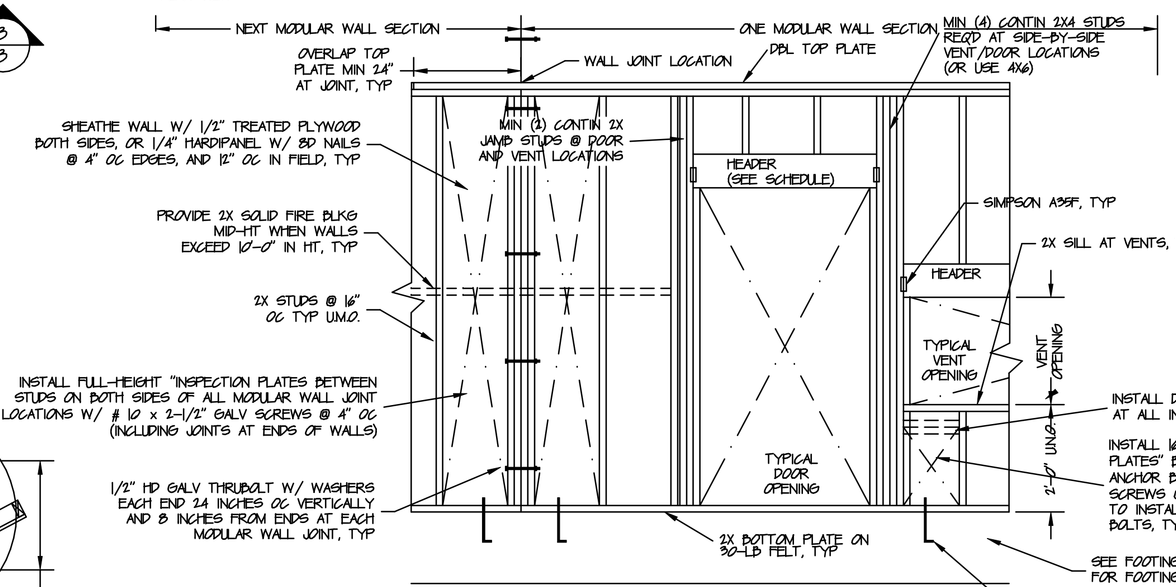

TYP. WALL FRAMING ELEVATION "MODULAR-TYPE" WALLS
SCALE: 1/2"=1'-0"

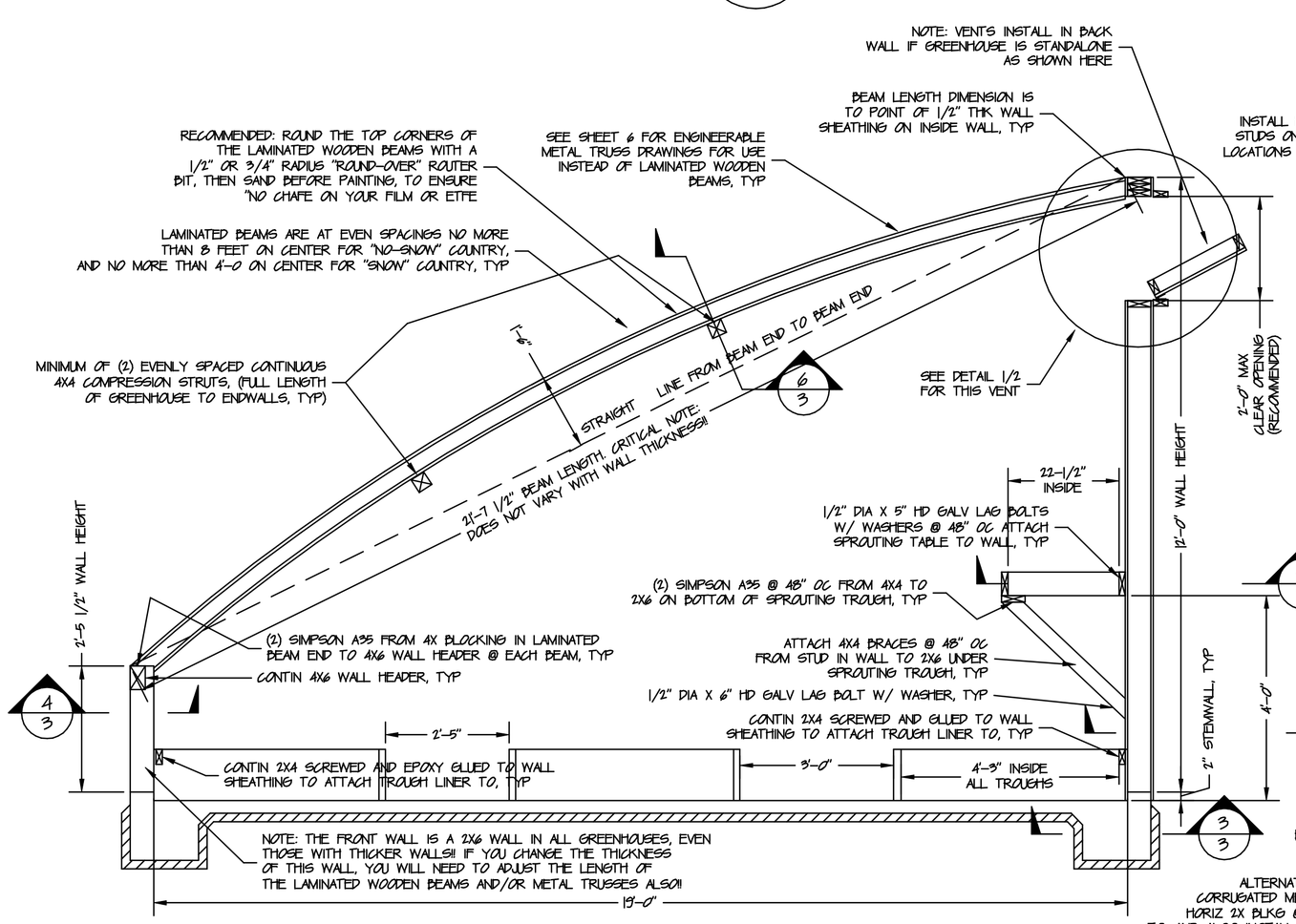

STANDALONE REAR WALL SECTION 1/3
1/2" = 1'-0"

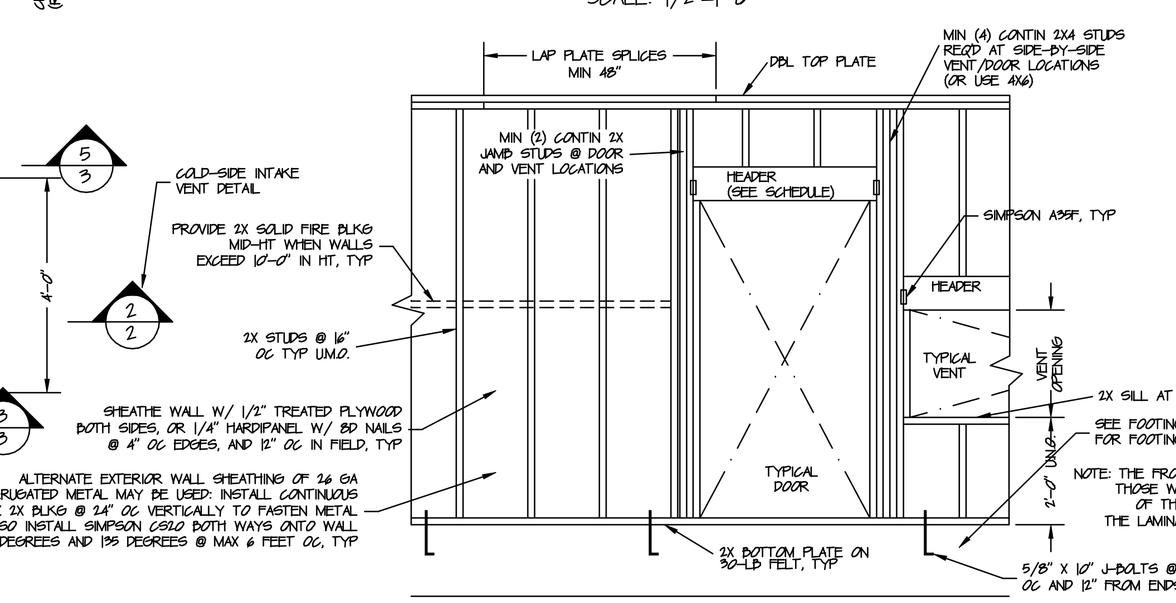

TYP. WALL FRAMING ELEVATION "BUILT-IN-PLACE" WALLS
SCALE: 1/2"=1'-0"

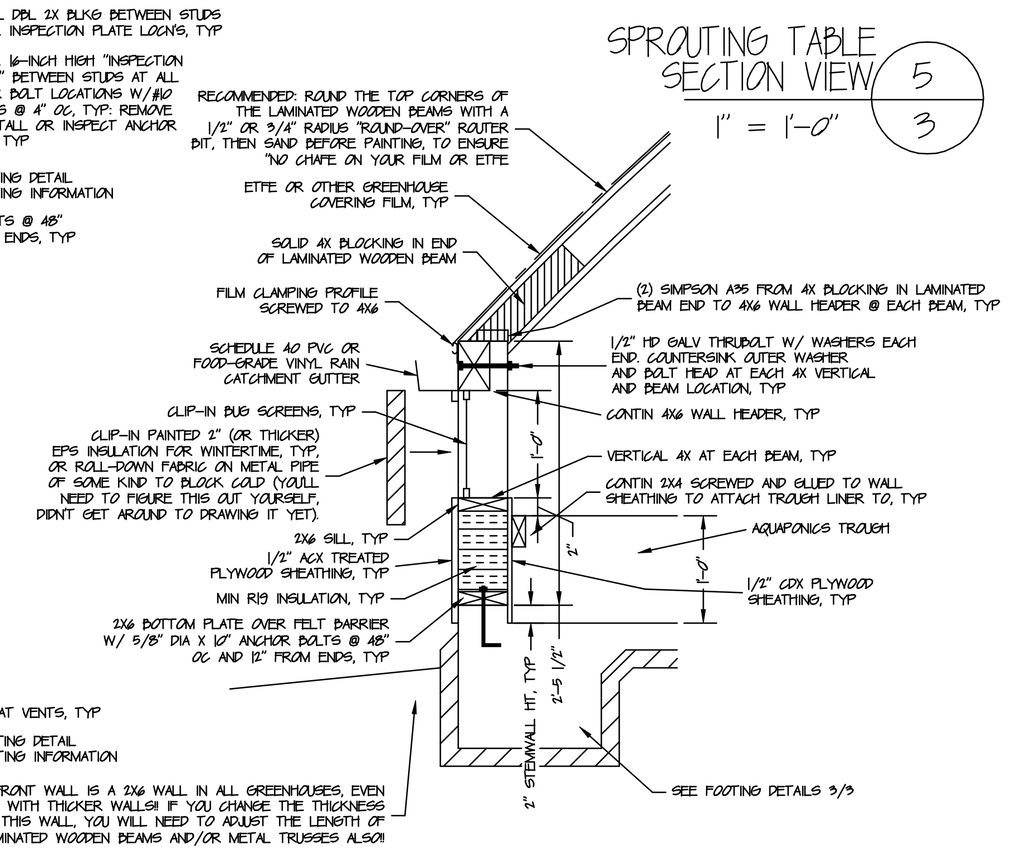

SECTION 4/3
1/2" = 1'-0"

SPROUTING TABLE SECTION VIEW 5/3
1" = 1'-0"

FRIENDLY AQUAPONICS, INC
44-2321 MIDDLE ROAD
P.O. BOX 1196
HONOKAA, HAWAII, 96727
(808) 775-7745

SOLAR GREENHOUSE AQUAPONICS SYSTEMS
SUPPORTED WALL SECTIONS (AS WHEN BUILT AGAINST AN EXISTING BUILDING) AND DETAILS

REV # 1
3-9-13
SHEET # 3

AGSAQUAPONICSSYSTEMREV1